KEPLER

Arihiro Miyake

The Kepler collection is made of painted extruded aluminium, whose continuous line is obtained through a three-dimensional manufacturing process developed by Nemo. Designed on the basis of the mathematical principle of the Möbius strip. Diffuser in opaque technopolymer.



UPLIGHT 3000K

LAMPING

Source	linear LED
Total power	70W
Emission	diffused
Switching	dimmable
Tension	120V
Color temperature	3000K
Luminous flux	4000lm
Typ CRI	85
IP class	20
Dimensions	Ø 43.3" x 15.7" H
Materials	aluminum + pc
Notes	adjustable cable length 8.2’ max, 3500K and 4000K available on request, extra cable on request, integral driver dual capability TRIAC-ELV and 0-10V
Net lamp weight	19,8 lbs

Codes

KEP LNN 51
KEPLWW51
KEP LOW 51

Structure

black
white
gold

PACKAGE

Package 01

Dimension: 47.6" x 47.6" x 20.5" inches / Gross weight: 41,9 lbs

Certificazioni

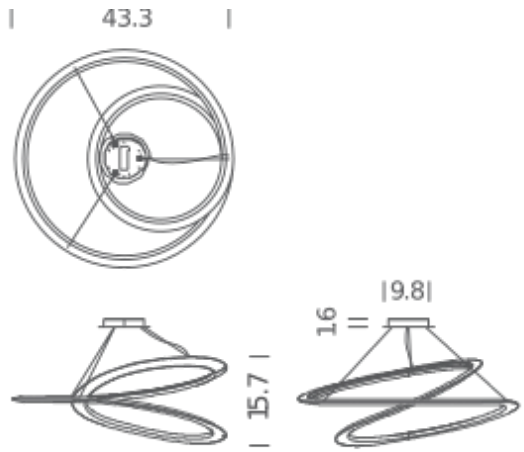

DOWNLIGHT 3000K

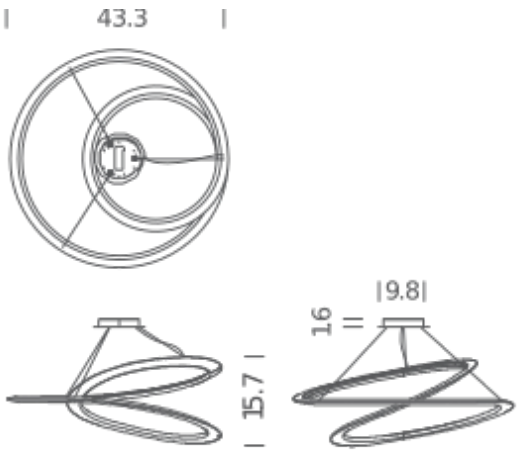

LAMPING

Source	linear LED
Total power	70W
Emission	diffused
Switching	dimmable
Tension	120V
Color temperature	3000K
Luminous flux	4000lm
Typ CRI	85
IP class	20
Dimensions	Ø 43.3" x 15.7" H
Materials	aluminum + pc
Notes	adjustable cable length 8.2’ max, 3500K and 4000K available on request, extra cable on request, integral driver dual capability TRIAC-ELV and 0-10V
Net lamp weight	19,8 lbs

Codes

KEP LNN 52

KEPLWW52

KEP LOW 52

Structure

black

white

gold

PACKAGE

Package 01

Dimension: 47.6" x 47.6" x 20.5" inches / Gross weight: 41,9 lbs

Certificazioni

Intertek

UPLIGHT 2700K

LAMPING

Source	linearLED
Total power	70W
Emission	diffused
Switching	dimmable
Tension	120V
Color temperature	2700K
Luminous flux	4000lm
Typ CRI	85
IP class	20
Dimensions	Ø 43.3" x 15.7" H
Materials	aluminum + pc
Notes	adjustable cable length 8.2’ max, 3500K and 4000K available on request, extra cable on request, integral driver dual capability TRIAC-ELV and 0-10V
Net lamp weight	19,8 lbs

Codes

KEP LNN 53
KEP LWW 53
KEP LOW 53

Structure

black
white
gold

PACKAGE

Package 01

Dimension: 47.6" x 47.6" x 20.5" inches / Gross weight: 41,9 lbs

Certificazioni



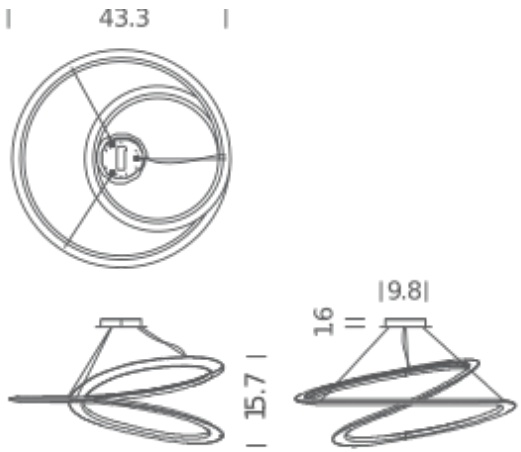

DOWNLIGHT 2700K

LAMPING

Source	Linear LED
Total power	70W
Emission	diffused
Switching	dimmable
Tension	120V
Color temperature	2700K
Luminous flux	4000lm
Typ CRI	85
IP class	20
Dimensions	Ø 43.3" x 15.7" H
Materials	aluminum + pc
Notes	adjustable cable length 8.2’ max, 3500K and 4000K available on request, extra cable on request, integral driver dual capability TRIAC-ELV and 0-10V
Net lamp weight	19,8 lbs

Codes	*Structure*
KEP LNN 54	black
KEPLWW54	white
KEP LOW 54	gold

PACKAGE

Package 01	Dimension: 47.6" x 47.6" x 20.5" inches / Gross weight: 41,9 lbs

Certificazioni



