NORMA

Mario Barbaglia

Una luce diffusa a 360° viene emessa da un diffusore tubolare in metacrilato opalino montato su una struttura in alluminio spazzolato lucido.

WALL 25

LAMPING

Source	LED board
Total power	20W
Emission	diffused
Tension	110-240V
Color temperature	3000K
Luminous flux	1800lm
Typ CRI	85
IP class	20
Materials	PMMA + aluminium
Notes	horizontal and vertical mounting
Net lamp weight	1,8 kg

Codes	*Structure/Diffuser*
NOR LLW 35	chrome/white

PACKAGE

Package 01	Dimension: 37x36x14 cm / Gross weight: 2,5 kg

Certificazioni

IP40

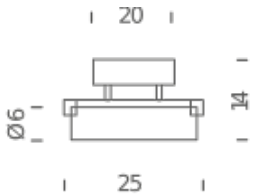

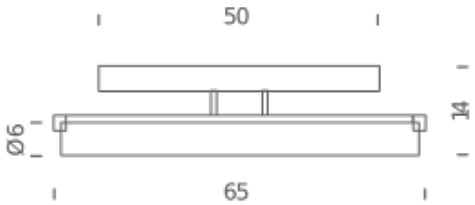

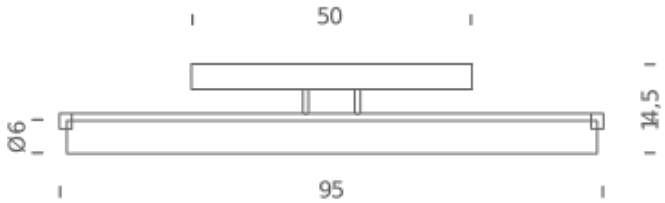

WALL 65

LAMPING

Source	LED board
Total power	17,5W
Emission	diffused
Switching	dimmable, DALI, push
Tension	230V
Color temperature	3000K
Luminous flux	1444lm
Typ CRI	85
IP class	20
Materials	PMMA + aluminium
Notes	horizontal and vertical mounting, also available in 120V
Net lamp weight	3 kg

Codes	*Structure/Diffuser*
NOR LLW 32	chrome/white

PACKAGE

Package 01	Dimension: 35x75x15 cm / Gross weight: 4 kg

Certificazioni

CE EAC IP40 UK CA

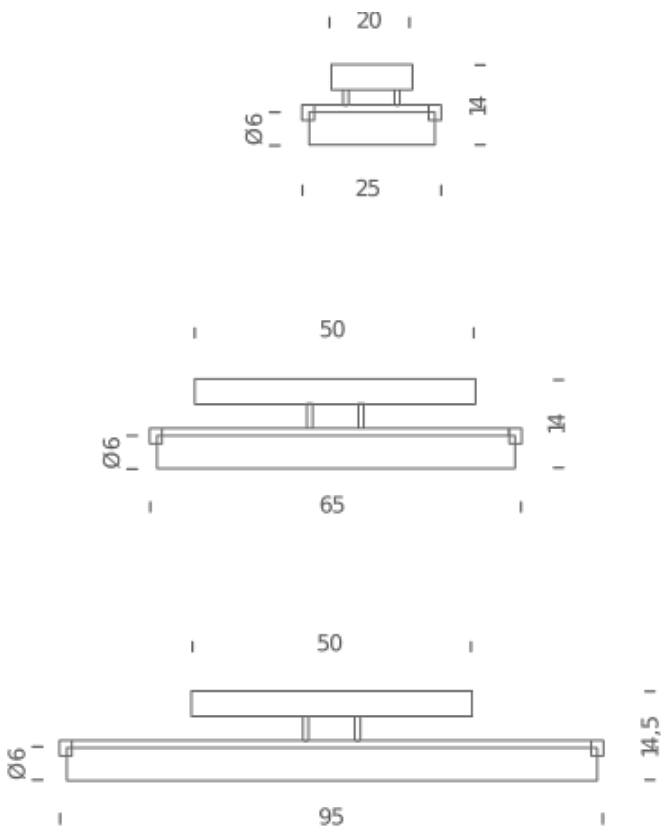

WALL 95

LAMPING

Source	LED board
Total power	27W
Emission	diffused
Switching	dimmable 1-10V, push
Tension	230V
Color temperature	3000K
Luminous flux	2400lm
Typ CRI	85
IP class	20
Materials	PMMA + aluminium
Notes	horizontal and vertical mounting, also available in 120V
Net lamp weight	5 kg

Codes	*Structure/Diffuser*
NOR LLW 33	chrome/white

PACKAGE

Package 01	Dimension: 35x110x15 cm / Gross weight: 6 kg

Certificazioni
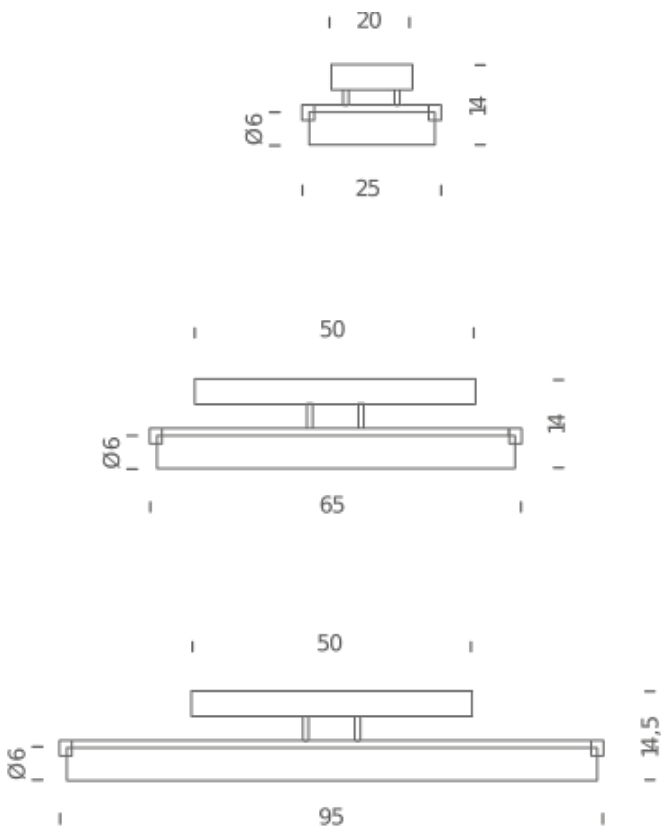
CE EAC IP40 UK CA